Velocity 173 RG ZU-CYJ
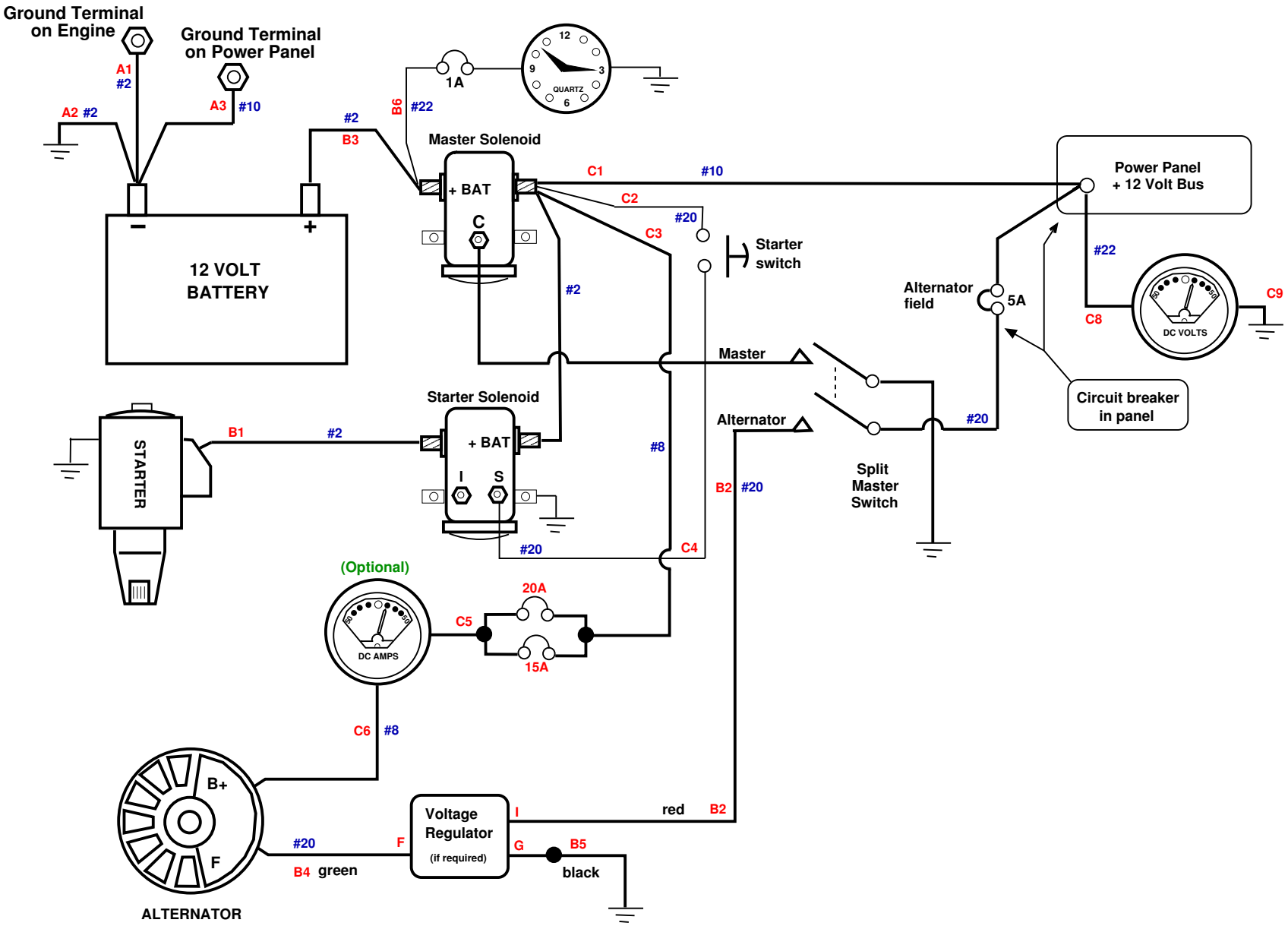
Power panel wiring diagram